HELIO Optoelectronics Corp.

Helixeon - White Series

Helixeon, a solid-state lighting device, provides high luminous flux output with high efficiency for the illumination applications. Helixeon is encapsulated in silicone by molding technology. It has characteristics of UV resistance and better heat loading. Also, Helixeon is capable of standard lead free solder reflow process.

Features

- High luminous flux output
- Silicone molding lens
- Standard lead free solder reflow process-JEDEC 020c
- RoHS certification

Application

- Torch lighting
- Down lighting
- Par lamp
- General lighting
- Brightness compensation

HELIO Optoelectronics Corp.

Product Nomenclature

HM	HP	-	E	3	L	W
X1	X2		X3	X4	X5	X6

X1		X2		X3		X4	
Item		Mode		Heat sink		Power	
Code	Type	Code	Type	Code	Type	Code	Type
HM	Molding	HP	High power	E	Emitter	3	3W

X5		X6	
Pattern		Color	
Code	Type	Code	Type
L	Lambertian	W	White
		V	Warm white
		S	Neutral White

Circuit Diagram of HELIXEON- Emitter

Radiation Pattern	Part number	Circuit diagram
Lambertian	HMHP-E3LW	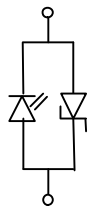
Lambertian	HMHP-E3LV	
Lambertian	HMHP-E3LS	

HELIO Optoelectronics Corp.

Package Dimensions

Lead Form

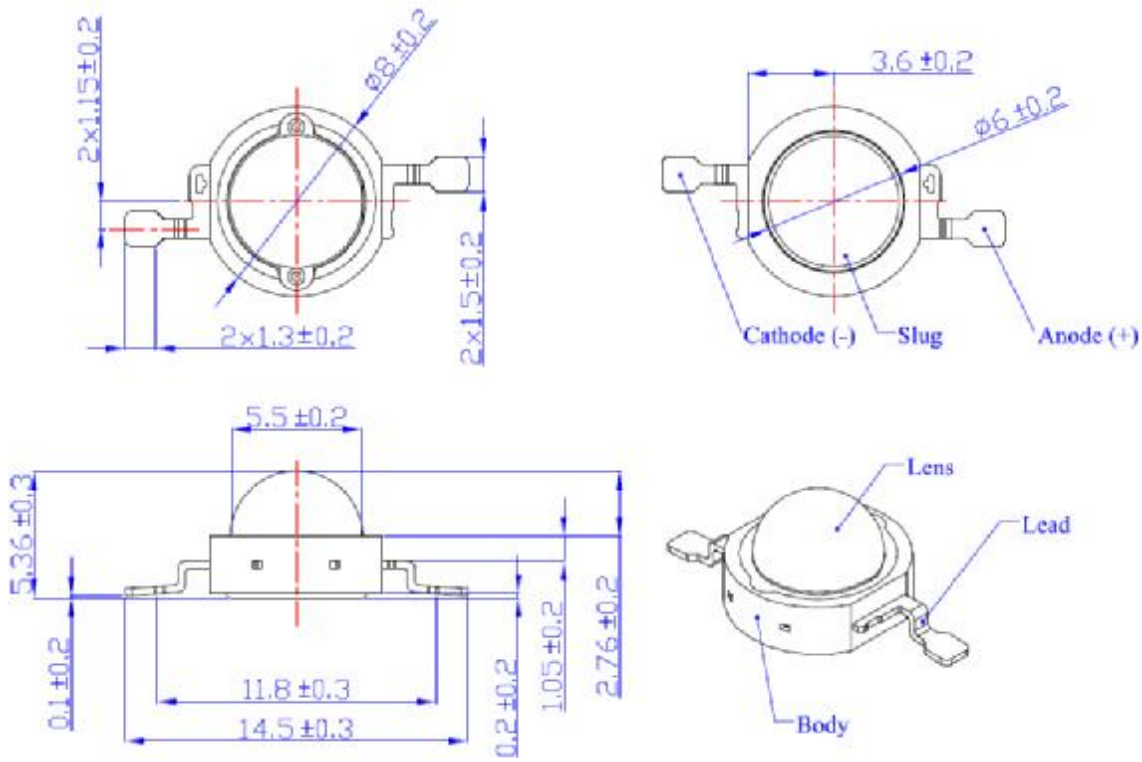

Note:

1. The anode side of the device is denoted by a hole in the lead frame.
2. Electrical insulation between the case and the board is required. The slug of the device is no electrically neutral.
3. Drawings are not to scale.
4. All dimensions are all in millimeter.
5. All dimensions without tolerance are for reference only.
6. Specifications are subject to change without notice.

HELIO Optoelectronics Corp.

Characteristics for Helixeon white emitter

HMHP-E3LW

Characteristics at I_F = 700mA (Ta=25℃):

Parameter	Symbol	Value			Unit
		Min	Typical	Max	
Luminous flux(1)	Φ_v(2)	113.6	140	--	lm
CRI	R_a	--	70	--	
View angle	$2\Theta_{1/2}$	--	130	--	degree
Correlated color temperature(3)	CCT	5000	--	10000	K
Forward voltage(4)	V_F	3.2	--	4.0	V
Power dissipation	P_D	2.24	--	2.8	W
Junction temperature	T_J	--	--	120	Deg.
Operation temperature	T_{OP}	-40~+105			℃
Storage temperature	T_{ST}	-40~+120			℃
ESD sensitivity		>8000 HBM			V

Bin code

Luminous Flux (lm)	Rank (BIN)		Correlated color temperature (K)	Rank (BIN)
67.2	T0		5000~5650	V
87.4	U0		5650~6300	W
113.6	V0		6300~7000	X
147.7	W0		7000~8000	Y
192.0	X0		8000~10000	Z

Note:

1. The typical luminous flux of Helixeon will be upgraded per season.
2. Φ_v, minimum luminous flux performance guaranteed within published operating conditions. HELIO maintains a tolerance of ±10% luminous flux measurements.
3. The correlated color temperature of Helixeon is divided into three main bins. In case of customized CCT, this detail information will be discussed in meeting.The tester tolerance of CCT is ±5%.
4. HELIO maintains a tolerance of±0.06V on forward voltage measurements.

HELIO Optoelectronics Corp.

Characteristics for Helixeon white emitter

HMHP-E3LV

Characteristics at I_F = 700mA (Ta=25℃):

Parameter	Symbol	Value			Unit
		Min	Typical	Max	
Luminous flux(1)	Φ_v(2)	100	115	--	lm
CRI	R_a	--	60	--	
View angle	$2\Theta_{1/2}$	--	120	--	degree
Correlated color temperature(3)	CCT	2650	--	3250	K
Forward voltage(4)	V_F	3.2	--	4.0	V
Power dissipation	P_D	2.24	--	2.8	W
Junction temperature	T_J	--	--	120	Deg.
Operation temperature	T_{OP}	-40~+105			℃
Storage temperature	T_{ST}	-40~+120			℃
ESD sensitivity		>8000 HBM			V

Bin code

Luminous Flux (lm)	Rank (BIN)		Correlated color temperature (K)	Rank (BIN)
87.4	U0		2650~2850	M
113.6	V0		2850~3050	N
147.7	W0		3050~3250	P
192.0	X0			

Note:

1. The typical luminous flux of Helixeon will be upgraded per season.
2. Φ_v, minimum luminous flux performance guaranteed within published operating conditions. HELIO maintains a tolerance of ±10% luminous flux measurements.
3. The correlated color temperature of Helixeon is divided into three main bins. In case of customized CCT, this detail information will be discussed in meeting. The tester tolerance of CCT is ±5%.
4. HELIO maintains a tolerance of±0.06V on forward voltage measurements.

HELIO Optoelectronics Corp.

Characteristics for Helixeon white emitter

HMHP-E3LS

Characteristics at I_F = 700mA (Ta=25℃):

Parameter	Symbol	Value			Unit
		Min	Typical	Max	
Luminous flux(1)	Φ_v(2)	113.6	140	--	lm
CRI	R_a	--	70	--	
View angle	$2\Theta_{1/2}$	--	120	--	degree
Correlated color temperature(3)	CCT	3500	--	4500	K
Forward voltage(4)	V_F	3.0	--	3.8	V
Power dissipation	P_D	2.1	--	2.66	W
Junction temperature	T_J	--	--	120	Deg.
Operation temperature	T_{OP}	-40~+105			℃
Storage temperature	T_{ST}	-40~+120			℃
ESD sensitivity		>8000 HBM			V

Bin code

Luminous Flux (lm)	Rank (BIN)		Correlated color temperature (K)	Rank (BIN)
87.4	U0		3500~3800	R
113.6	V0		3800~4100	S
147.7	W0		4100~4500	T
192.0	X0			

Note:

1. The typical luminous flux of Helixeon will be upgraded per season.
2. Φ_v, minimum luminous flux performance guaranteed within published operating conditions. HELIO maintains a tolerance of ±10% luminous flux measurements.
3. The correlated color temperature of Helixeon is divided into three main bins. In case of customized CCT, this detail information will be discussed in meeting.The tester tolerance of CCT is ±5%.
4. HELIO maintains a tolerance of±0.06V on forward voltage measurements.

HELIO Optoelectronics Corp.

Optical characteristics

Emission spectrum

HMHP-E3LW / HMHP-E3LV/ HMHP-E3LS

(White / Warm white / Neutral white)

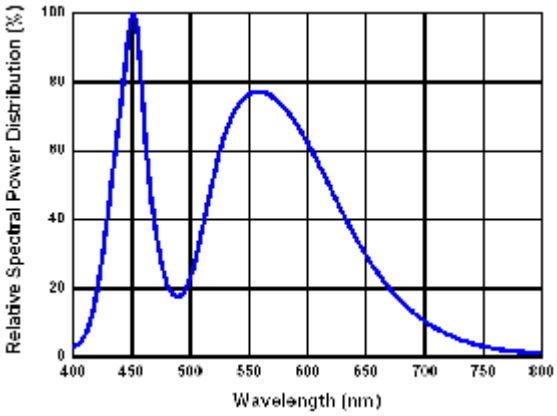

White

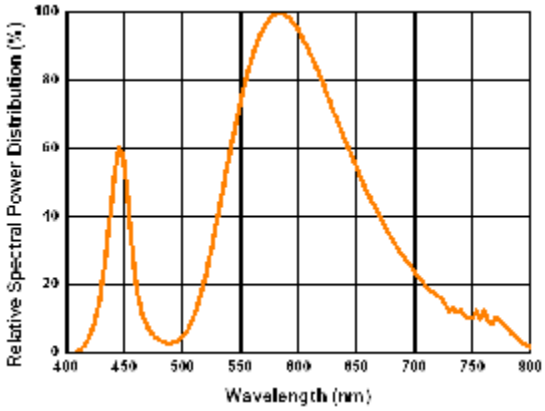

Warm white

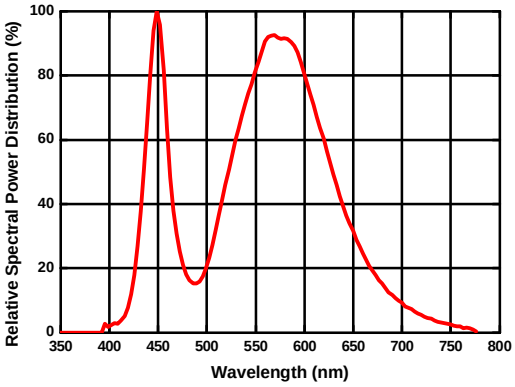

Neutral white

HELIO Optoelectronics Corp.

Radiation Pattern

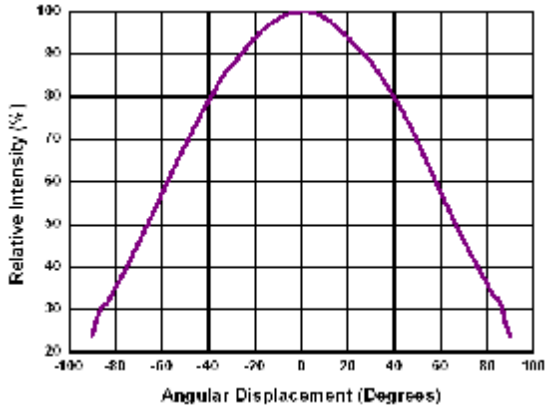

White

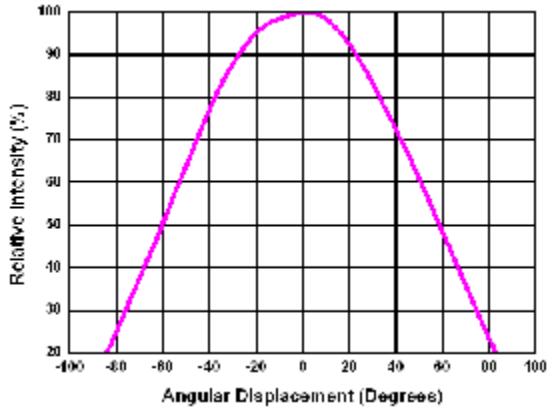

Warm white & Neutral white

Electrical characteristics

Typical Forward Current Characteristics

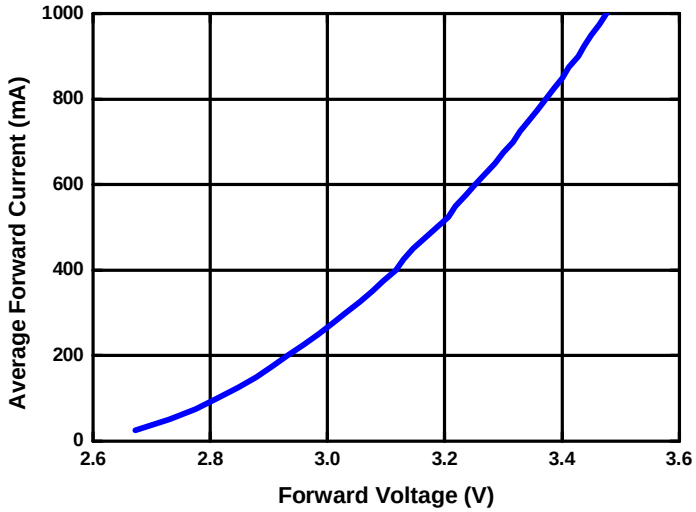

Typical Light Output Characteristics over Forward Current

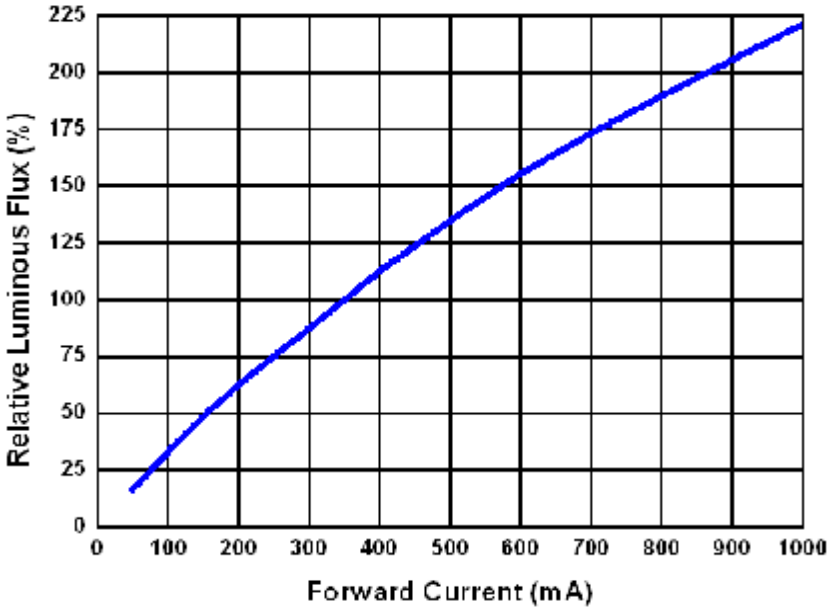

HELIO Optoelectronics Corp.

Handling Precaution

The softness and dust affinity of silicone molding lens constrain the handling of LED. Thus, some handling indications of HELIXEON emitters are presented for possible damage prevention and excellent reliability.

- Avoid leaving fingerprints or scratches (by sharp tools) on the silicone resin parts.
- Do not force over 2000gf impact or pressure on the silicone molding lens.
- The LEDs should only be picked up by making contact with the sides of the LED body.
- When populating in SMT production, the pick-and-place nozzle must not place excessive pressure on the silicone molding lens.

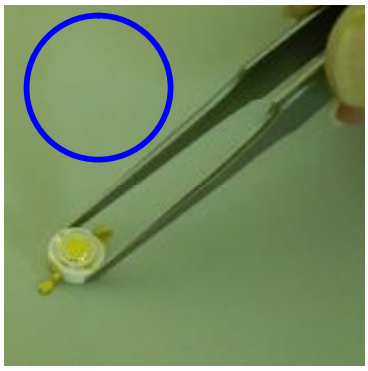

HELIO Optoelectronics Corp.

Reliability Test List

Test Item	Standard Test Method	Test Conditions	Note	Number of Damaged
Resistance to soldering heat (reflow soldering)	JEITA ED-4701 300 301	Ta=260℃, 10sec. (Pre treatment 25℃,70%,168hrs.)	2 times	0/10
Solderability (reflow soldering)	JEITA ED-4701 300 303	Tsld=215±5℃, 3sec. (Lead Solder)	1 time over 95%	0/10
Steady state operating life		Ta=25℃, I_F = 700mA Tested with Helio standard circuit board	1000 hrs.	0/10
Steady state operating life of high humidity heat		85℃, RH=85%, I_F = 700mA Tested with Helio standard circuit board	1000 hrs.	0/10
Temperature cycle	JEITA ED-4701 100 105	-40℃ ~ 25℃ ~ 100℃ ~ 25℃ 30min. 5min. 30min. 5min.	100 cycles	0/10
Thermal shock	JEITA ED-4701 300 307	0℃ ~ 100℃ 15sec. 15sec.	20 cycles	0/10
High temperature storage	JEITA ED-4701 200 201	Ta=100℃	1000 hrs.	0/10
Low temperature storage	JEITA ED-4701 200 202	Ta=-40℃	1000 hrs.	0/10
Vibration		2000 Hz, 2directions	60min.	0/10

Failure Criteria：

- Forward Voltage shift ：> 200 mV
- Luminous Flux degradation ：> 10 %
- Forward or Reverse Leakage ：>10 μA
- Catastrophic failure

HELIO Optoelectronics Corp.

Tube Package Specifications

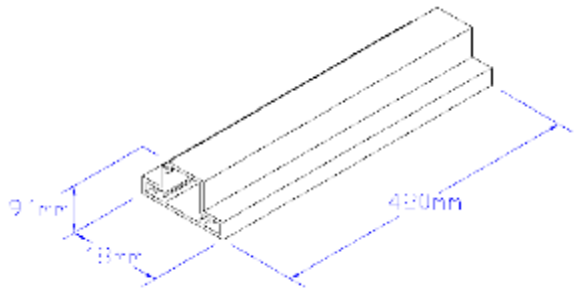

Tube

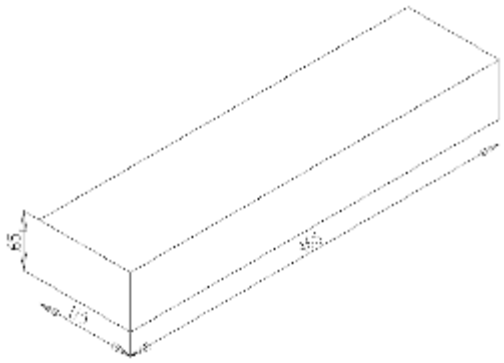

Inner carton

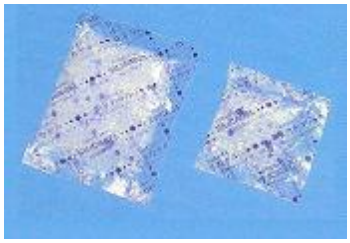

Dry agent

Note:

1. There are 50pcs emitters in a tube.
2. An antistatic bag contains 20 tubes and a drying agent.
3. There are 20 tubes in an inner carton.
4. All dimensions are all in millimeter.